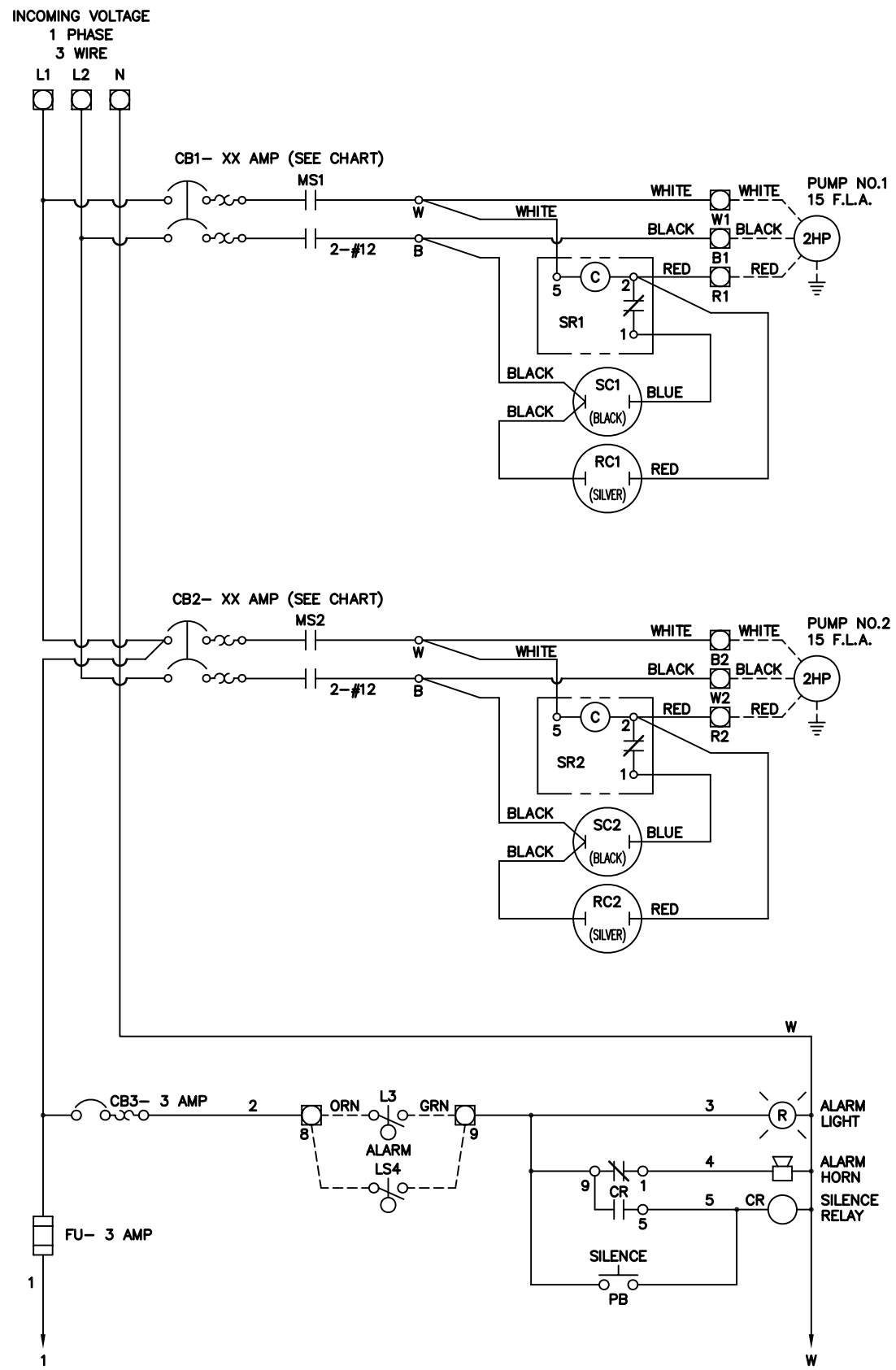

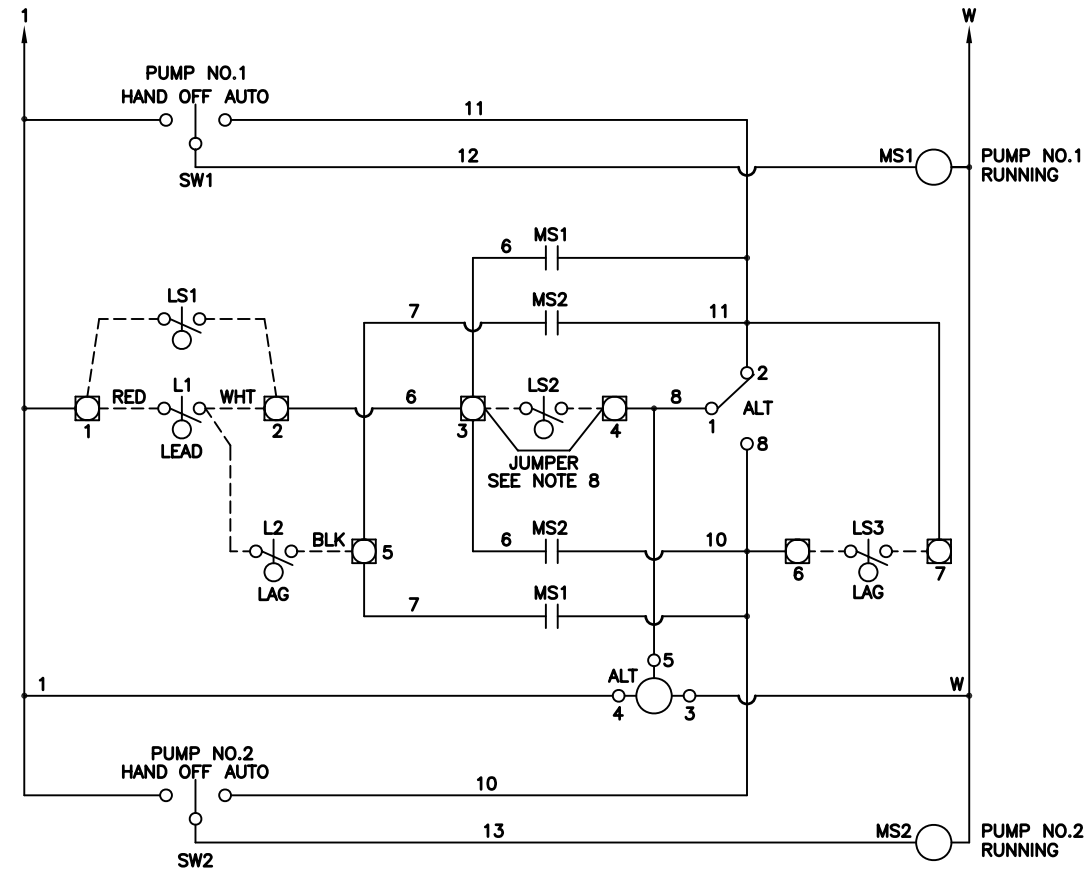

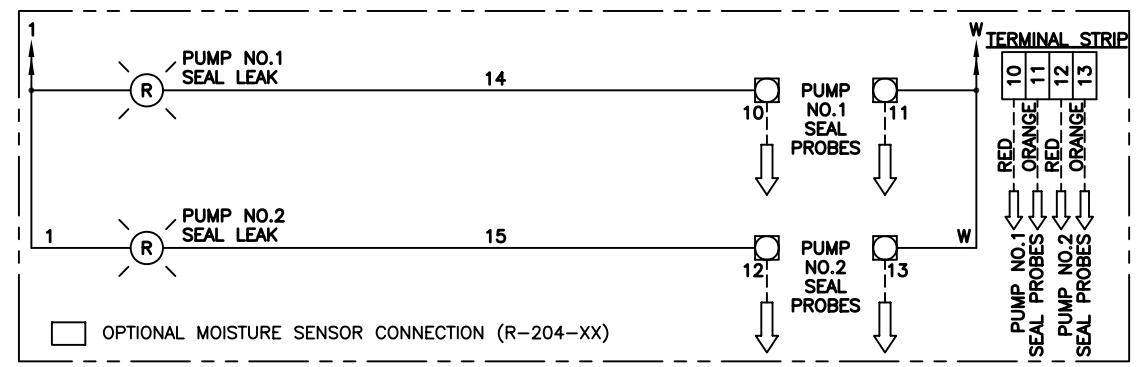

	H.P./MODEL	VOLTAGE/PHASE	DUPLEX BREAKER SIZE
	2HP SGV	240/1	30 AMP DOUBLE POLE
	2HP SGV	200/1	30 AMP DOUBLE POLE

ESPS TERMINAL STRIP

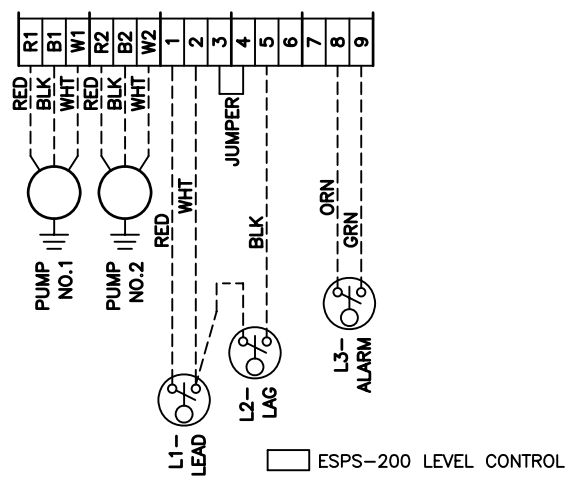

FLOAT SWITCH TERMINAL STRIP

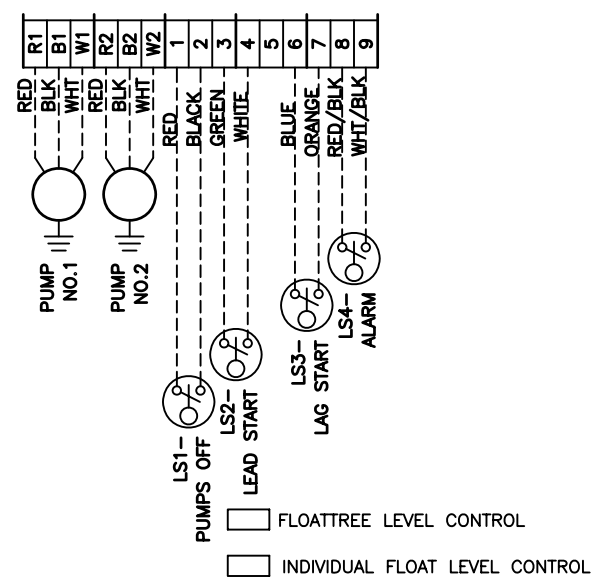

NOTES:

1.) PANEL GROUND TERMINAL MUST BE CONNECTED TO EARTH GROUND.
2.) FACTORY WIRING IS SHOWN ————————
FIELD WIRING IS SHOWN - - - - - - - - - - - - - - - - -
3.) INSTALLER MUST PROVIDE A MAIN DISCONNECTING DEVICE WITH SHORT CIRCUIT PROTECTION FOR THIS ELECTRICAL ASSEMBLY.
4.) RECOMMENDED TIGHTENING TORQUES FOR TERMINALS HIGH VOLTAGE POWER 30 POUND INCHES. 120 VOLT POWER, CONTROL & LOW VOLTAGE – 20 POUND INCHES.
5.) THIS CIRCUIT DIAGRAM IS DRAWN WITH NO ELECTRICAL POWER, THAT IS, WITH ALL COMPONENTS IN DE–ENERGIZED STATE.
6.) ALL LEVEL SENSING SWITCHES ARE SHOWN WITH NO LIQUID IN TANK OR WELL.
7.) PUMP MOTOR INCLUDES INTEGRAL OVERLOAD PROTECTION DEVICE.

STEALTH™ CONTROL PANELS

Underwriters Laboratories Inc.®

THIS PRINT IS AND CONTAINS PROPRIETARY INFORMATION OWNED EXCLUSIVELY BY CRANE PUMPS & SYSTEMS, INC. THIS RESTRICTION INCLUDES, BUT IS NOT LIMITED TO THE CONDITION THAT THIS PRINT WILL ONLY BE USED AS A RECORD OR TO IDENTIFY OR INSPECT PARTS OR FOR OTHER INFORMATION PURPOSES, AND WILL NOT BE USED TO MANUFACTURE OR PROCURE THE MANUFACTURE OF THE PARTS SHOWN IN THIS PRINT BY ANY OTHER SOURCE THAN CRANE PUMPS & SYSTEMS, INC.

THIS DRAWING IS APPROVED FOR UNCONTROLLED DISTRIBUTION

AS A RESULT OF BARNES CONSTANT PRODUCT IMPROVEMENT PROGRAM, PRODUCT CHANGES MAY OCCUR. AS SUCH, BARNES RESERVES THE RIGHT TO CHANGE PRODUCT WITHOUT PRIOR WRITTEN NOTIFICATION

WWW.BARNES-PS.COM

SHEET 1 OF 1

TITLE: PANEL, STEALTH-R-202&204-22&20

CAGE NO: 96046

DWG NO: CD118810

REV: B

CRANE® PUMPS & SYSTEMS

BARNES® PRESSURE SYSTEMS